SERVICE & OPERATING MANUAL
Original Instructions

Certified Quality

SAI GLOBAL
ISO 9001 Certified
ISO 14001 Certified

Member of: Hydraulic Institute

Model SSB1 & DSB1
Metallic
Design Level 4

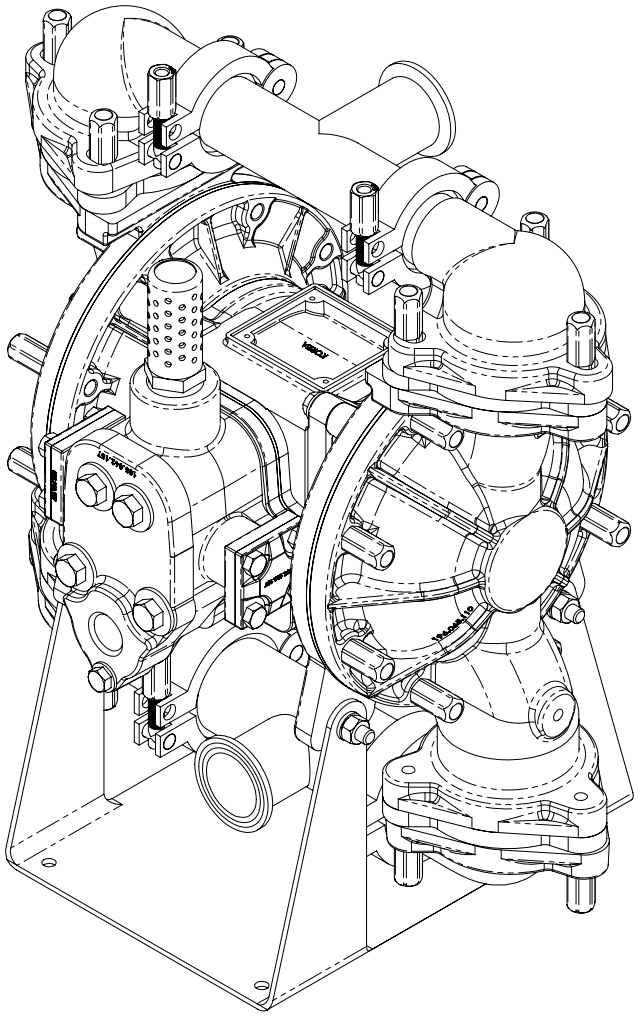

Warren Rupp, Inc.
A Unit of IDEX Corporation
800 N. Main St.,
Mansfield, Ohio 44902 USA
Telephone (419) 524.8388
Fax (419) 522.7867
SANDPIPERPUMP.COM

© Copyright 2017 Warren Rupp, Inc.
All rights reserved

SANDPIPER®
A WARREN RUPP, INC. BRAND
SANDPIPERPUMP.COM

Safety Information

⚠ IMPORTANT

Read the safety warnings and instructions in this manual before pump installation and start-up. Failure to comply with the recommendations stated in this manual could damage the pump and void factory warranty.

When the pump is used for materials that tend to settle out or solidify, the pump should be flushed after each use to prevent damage. In freezing temperatures the pump should be completely drained between uses.

⚠ CAUTION

Before pump operation, inspect all fasteners for loosening caused by gasket creep. Retighten loose fasteners to prevent leakage. Follow recommended torques stated in this manual.

Nonmetallic pumps and plastic components are not UV stabilized. Ultraviolet radiation can damage these parts and negatively affect material properties. Do not expose to UV light for extended periods of time.

WARNING
Pump not designed, tested or certified to be powered by compressed natural gas. Powering the pump with natural gas will void the warranty.

WARNING
The use of non-OEM replacement parts will void (or negate) agency certifications, including CE, ATEX, CSA, 3A and EC1935 compliance (Food Contact Materials). Warren Rupp, Inc. cannot ensure nor warrant non-OEM parts to meet the stringent requirements of the certifying agencies.

⚠ WARNING

When used for toxic or aggressive fluids, the pump should always be flushed clean prior to disassembly.

Before maintenance or repair, shut off the compressed air line, bleed the pressure, and disconnect the air line from the pump. Be certain that approved eye protection and protective clothing are worn at all times. Failure to follow these recommendations may result in serious injury or death.

Airborne particles and loud noise hazards. Wear eye and ear protection.

In the event of diaphragm rupture, pumped material may enter the air end of the pump, and be discharged into the atmosphere. If pumping a product that is hazardous or toxic, the air exhaust must be piped to an appropriate area for safe containment.

Take action to prevent static sparking. Fire or explosion can result, especially when handling flammable liquids. The pump, piping, valves, containers and other miscellaneous equipment must be properly grounded.

This pump is pressurized internally with air pressure during operation. Make certain that all fasteners are in good condition and are reinstalled properly during reassembly.

Use safe practices when lifting

Grounding ATEX Pumps

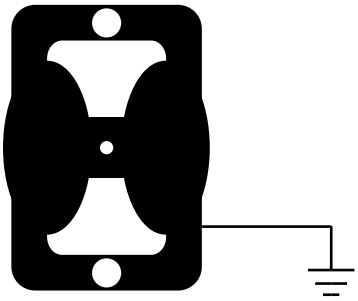

ATEX compliant pumps are suitable for use in explosive atmospheres when the equipment is properly grounded in accordance with local electrical codes. Pumps equipped with electrically conductive diaphragms are suitable for the transfer of conductive or non-conductive fluids of any explosion group. When operating pumps equipped with non-conductive diaphragms that exceed the maximum permissible projected area, as defined in EN 13461-1: 2009 section 6.7.5 table 9, the following protection methods must be applied:

- Equipment is always used to transfer electrically conductive fluids or
- Explosive environment is prevented from entering the internal portions of the pump, i.e. dry running

For further guidance on ATEX applications, please consult the factory.

Table of Contents

SECTION 1: PUMP SPECIFICATIONS.....1
- Explanation of Nomenclature
- Performance
- Materials
- Dimensional Drawings

SECTION 2: INSTALLATION & OPERATION.....4
- Principle of Pump Operation
- Recommended Installation Guide
- Troubleshooting Guide
- Material Codes

SECTION 3: EXPLODED VIEW.....8
- Composite Repair Parts Drawing
- Composite Repair Parts List

SECTION 4: AIR END.....10
- Air Valve Assembly for Aluminum Center Sections
- Pilot Valve Assembly

SECTION 5: WET END 12
- Diaphragm Drawings
- Diaphragm Servicing

SECTION 7: WARRANTY & CERTIFICATES 13
- Warranty
- EC Declaration of Conformity - Machinery
- EC Declaration of Conformity - ATEX

Explanation of Pump Nomenclature

Your Model #: *(fill in from pump nameplate)*

Pump Series	Pump Design	Pump Size and Options	Options	Discharge Porting	Diaphragm/ Valve	Design Level	Construction
Model #: XX	X	XXXXXX,	X	XX	XXX	X	XX

Pump Series
S SANDPIPER®

Pump Design
B Ball Valve

Pump Size
1 1 1/2" Tri-Clamp

Discharge Porting Position
T Top

Diaphragm Check Valve Materials
F FDA Accepted White Nitrile

Design Level
4

Construction
SS Stainless Steel Wetted, Aluminum Air

Options
Model DSB1 requires amn electronic leak detector:

032.037.000 (110VAC)
032.043.000 (220VAC)
032.044.000 (12-32VDC)

This model is not ATEX compliant.

Your Serial #: *(fill in from pump nameplate)* _____

ATEX Detail

(1) II 2G c T5
II 2D c T100°C

Performance

SSB1 & DSB1

SUCTION/DISCHARGE PORT SIZE
- 1 ½" Tri-Clamp Flange Fitting

CAPACITY
- 0 to 54 gallons per minute (0 to 204 liters per minute)

AIR DISTRIBUTION VALVE
- No-lube, no-stall design

SOLIDS-HANDLING
- Up to .25 in. (6mm)

HEADS UP TO
- 125 psi or 289 ft. of water (8.8 Kg/cm^2 or 88 meters)

MAXIMUM OPERATING PRESSURE
- 125 psi (8.6 bar)

DISPLACEMENT/STROKE
- .09 Gallon / .34 liter

SHIPPING WEIGHT
- SSB1 Models 60 lbs. (27.2kg)
- DSB1 Model 62 lbs. (28.1kg)

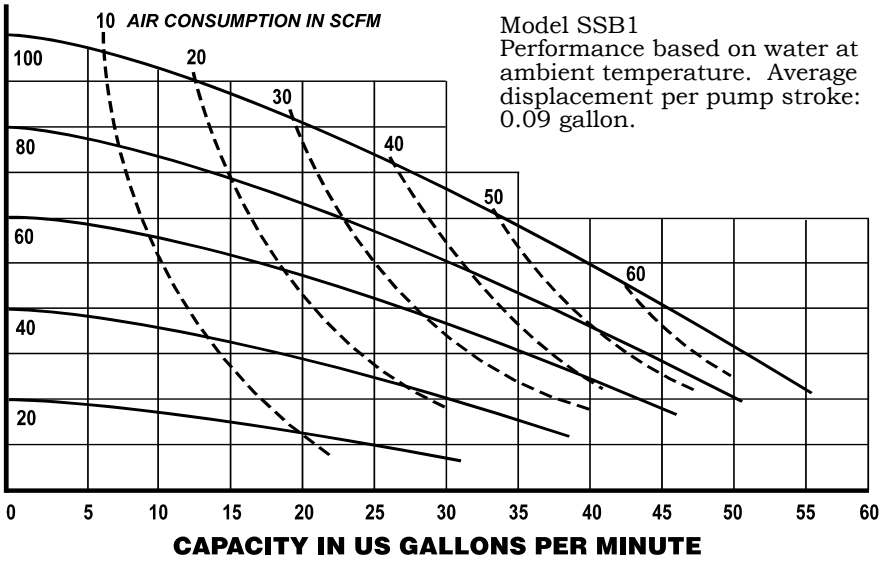

Model SSB1
Performance based on water at ambient temperature. Average displacement per pump stroke: 0.09 gallon.

Materials

Material Profile:	Operating Temperatures:	
⚠ *CAUTION! Operating temperature limitations are as follows:*	Max.	Min.
EPDM: Shows very good water and chemical resistance. Has poor resistance to oils and solvents, but is fair in ketones and alcohols.	280°F 138°C	-40°F -40°C
Nitrile: General purpose, oil-resistant. Shows good solvent, oil, water and hydraulic fluid resistance. Should not be used with highly polar solvents like acetone and MEK, ozone, chlorinated hydrocarbons and nitro hydrocarbons.	190°F 88°C	-10°F -23°C
Maximum and Minimum Temperatures are the limits for which these materials can be operated. Temperatures coupled with pressure affect the longevity of diaphragm pump components. Maximum life should not be expected at the extreme limits of the temperature ranges.		
Metals:		
Stainless Steel: Equal to or exceeding ASTM specification A743 CF-8M for corrosion resistant iron chromium, iron chromium nickel and nickel based alloy castings for general applications. Commonly referred to as 316 Stainless Steel in the pump industry.		

For specific applications, always consult the Chemical Resistance Chart.

Ambient temperature range: -20°C to +40°C
Process temperature range: -20°C to +80°C for models rated as category 1 equipment
-20°C to +100°C for models rated as category 2 equipment

In addition, the ambient temperature range and the process temperature range do not exceed the operating temperature range of the applied non-metallic parts as listed in the manuals of the pumps.

Dimensional Drawings

SSB1 & DSB1 SANITARY BALL VALVE

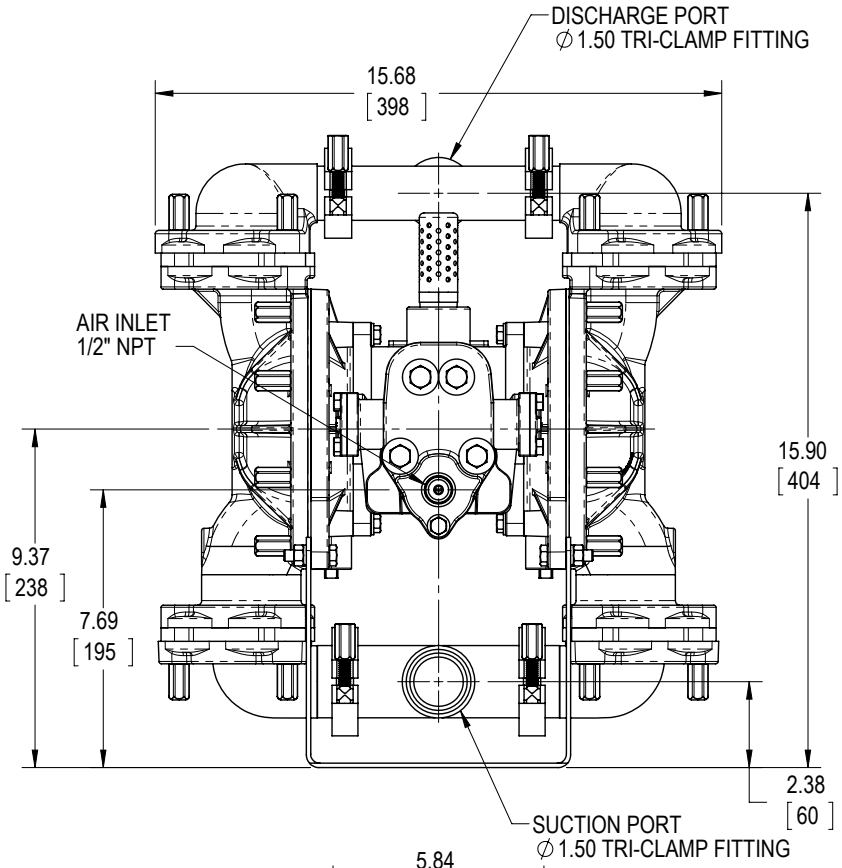

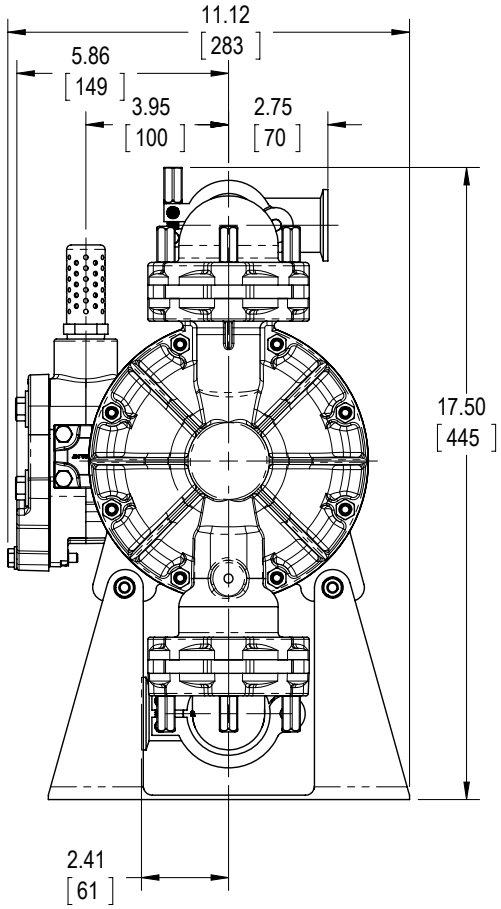

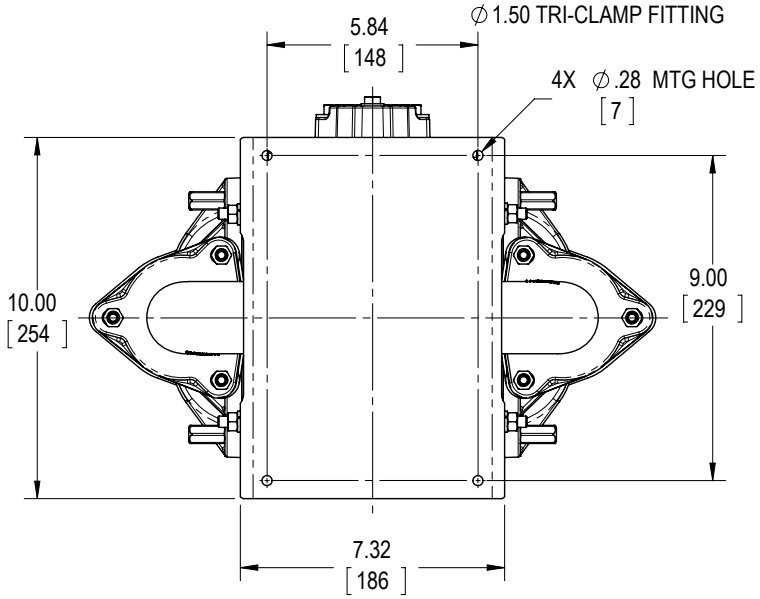

SSB1 / DSB1

SANITARY BALL VALVE

DIMENSIONAL TOLERANCE ±.125 [3]

[XX] = MILLIMETERS

Principle of Pump Operation

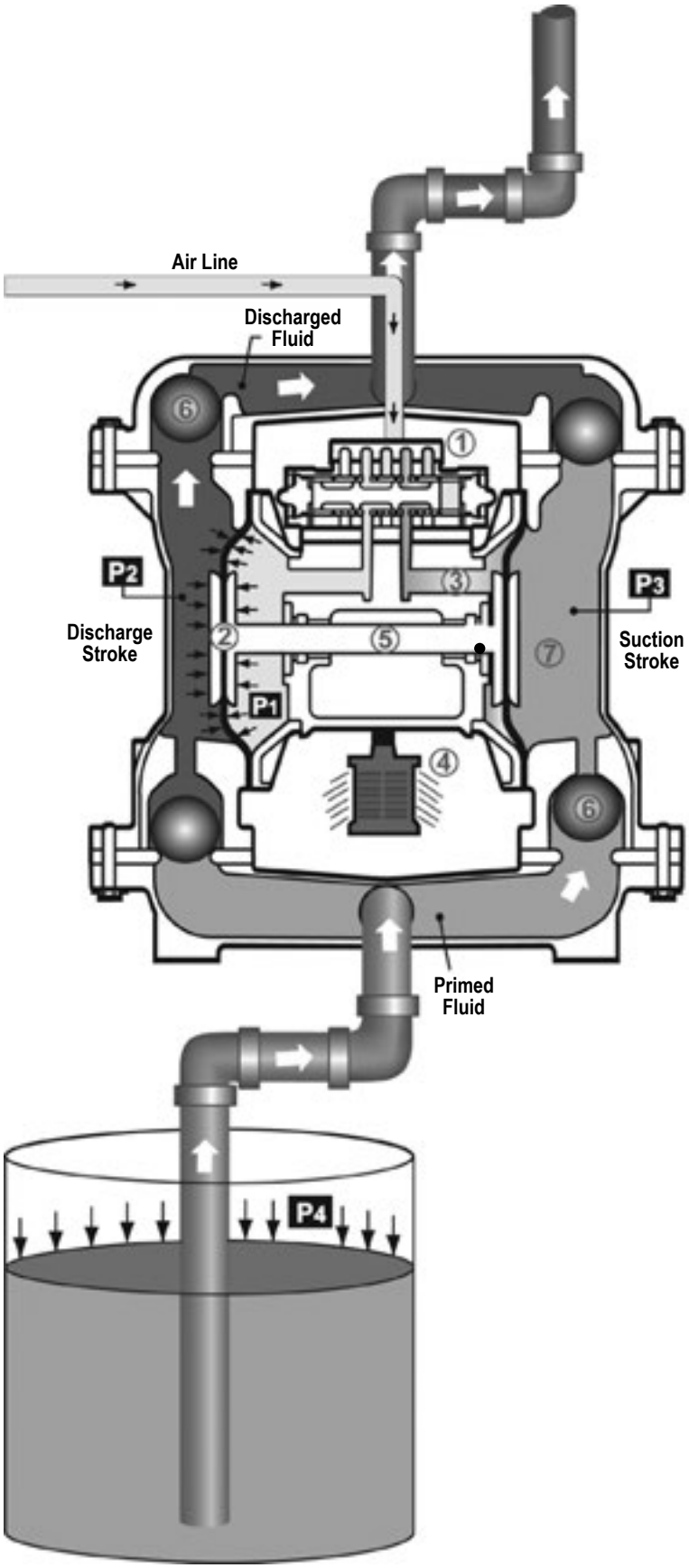

Air-Operated Double Diaphragm (AODD) pumps are powered by compressed air or nitrogen.

The main directional (air) control valve ① distributes compressed air to an air chamber, exerting uniform pressure over the inner surface of the diaphragm ②. At the same time, the exhausting air ③ from behind the opposite diaphragm is directed through the air valve assembly(s) to an exhaust port ④.

As inner chamber pressure **(P1)** exceeds liquid chamber pressure **(P2)**, the rod ⑤ connected diaphragms shift together creating discharge on one side and suction on the opposite side. The discharged and primed liquid's directions are controlled by the check valves (ball or flap)⑥ orientation.

The pump primes as a result of the suction stroke. The suction stroke lowers the chamber pressure **(P3)** increasing the chamber volume. This results in a pressure differential necessary for atmospheric pressure **(P4)** to push the fluid through the suction piping and across the suction side check valve and into the outer fluid chamber ⑦.

Suction (side) stroking also initiates the reciprocating (shifting, stroking or cycling) action of the pump. The suction diaphragm's movement is mechanically pulled through its stroke. The diaphragm's inner plate makes contact with an actuator plunger aligned to shift the pilot signaling valve. Once actuated, the pilot valve sends a pressure signal to the opposite end of the main directional air valve, redirecting the compressed air to the opposite inner chamber.

SUBMERGED ILLUSTRATION

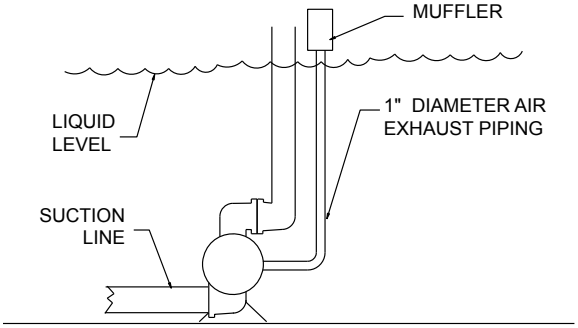

Pump can be submerged if the pump materials of construction are compatible with the liquid being pumped. The air exhaust must be piped above the liquid level. When the pumped product source is at a higher level than the pump (flooded suction condition), pipe the exhaust higher than the product source to prevent siphoning spills.

Recommended Installation Guide

Available Accessories:

1. Surge Suppressor
2. Filter/Regulator
3. Air Dryer

Note: Surge Suppressor and Piping must be supported after the flexible connection

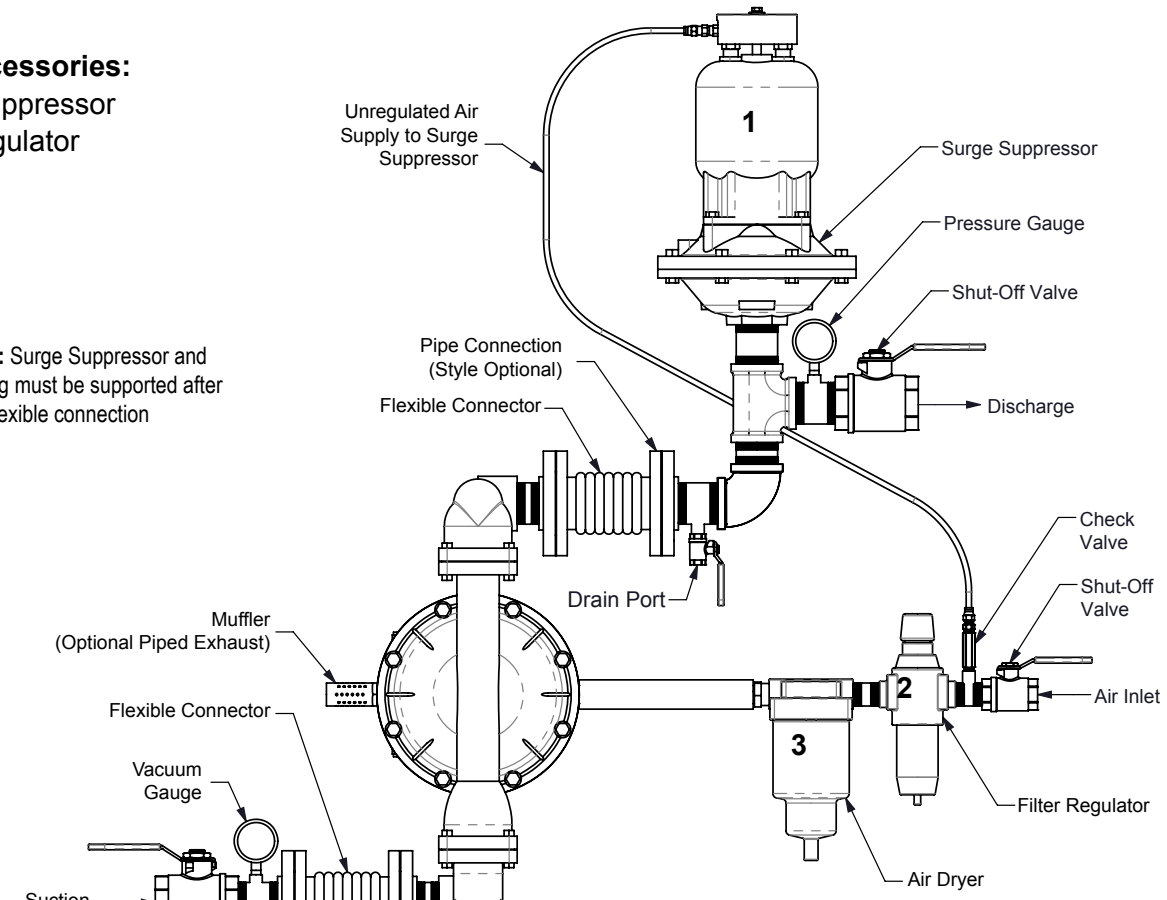

CAUTION

The air exhaust should be piped to an area for safe disposition of the product being pumped, in the event of a diaphragm failure.

Installation And Start-Up

Locate the pump as close to the product being pumped as possible. Keep the suction line length and number of fittings to a minimum. Do not reduce the suction line diameter.

Air Supply

Connect the pump air inlet to an air supply with sufficient capacity and pressure to achieve desired performance. A pressure regulating valve should be installed to insure air supply pressure does not exceed recommended limits.

Air Valve Lubrication

The air distribution system is designed to operate WITHOUT lubrication. This is the standard mode of operation. If lubrication is desired, install an air line lubricator set to deliver one drop of SAE 10 non-detergent oil for every 20 SCFM (9.4 liters/sec.) of air the pump consumes. Consult the Performance Curve to determine air consumption.

Air Line Moisture

Water in the compressed air supply may cause icing or freezing of the exhaust air, causing the pump to cycle erratically or stop operating. Water in the air supply can be reduced by using a point-of-use air dryer.

Air Inlet And Priming

To start the pump, slightly open the air shut-off valve. After the pump primes, the air valve can be opened to increase air flow as desired. If opening the valve increases cycling rate, but does not increase the rate of flow, cavitation has occurred. The valve should be closed slightly to obtain the most efficient air flow to pump flow ratio.

Troubleshooting Guide

Symptom:	Potential Cause(s):	Recommendation(s):
Pump Cycles Once	Deadhead (system pressure meets or exceeds air supply pressure).	Increase the inlet air pressure to the pump. Pump is designed for 1:1 pressure ratio at zero flow. (Does not apply to high pressure 2:1 units).
	Air valve or intermediate gaskets installed incorrectly.	Install gaskets with holes properly aligned.
	Bent or missing actuator plunger.	Remove pilot valve and inspect actuator plungers.
Pump Will Not Operate / Cycle	Pump is over lubricated.	Set lubricator on lowest possible setting or remove. Units are designed for lube free operation.
	Lack of air (line size, PSI, CFM).	Check the air line size and length, compressor capacity (HP vs. cfm required).
	Check air distribution system.	Disassemble and inspect main air distribution valve, pilot valve and pilot valve actuators.
	Discharge line is blocked or clogged manifolds.	Check for inadvertently closed discharge line valves. Clean discharge manifolds/piping.
	Deadhead (system pressure meets or exceeds air supply pressure).	Increase the inlet air pressure to the pump. Pump is designed for 1:1 pressure ratio at zero flow. (Does not apply to high pressure 2:1 units).
	Blocked air exhaust muffler.	Remove muffler screen, clean or de-ice, and re-install.
	Pumped fluid in air exhaust muffler.	Disassemble pump chambers. Inspect for diaphragm rupture or loose diaphragm plate assembly.
	Pump chamber is blocked.	Disassemble and inspect wetted chambers. Remove or flush any obstructions.
Pump Cycles and Will Not Prime or No Flow	Cavitation on suction side.	Check suction condition (move pump closer to product).
	Check valve obstructed. Valve ball(s) not seating properly or sticking.	Disassemble the wet end of the pump and manually dislodge obstruction in the check valve pocket. Clean out around valve ball cage and valve seat area. Replace valve ball or valve seat if damaged. Use heavier valve ball material.
	Valve ball(s) missing (pushed into chamber or manifold).	Worn valve ball or valve seat. Worn fingers in valve ball cage (replace part). Check Chemical Resistance Guide for compatibility.
	Valve ball(s) / seat(s) damaged or attacked by product.	Check Chemical Resistance Guide for compatibility.
	Check valve and/or seat is worn or needs adjusting.	Inspect check valves and seats for wear and proper setting. Replace if necessary.
	Suction line is blocked.	Remove or flush obstruction. Check and clear all suction screens or strainers.
	Excessive suction lift.	For lifts exceeding 20' of liquid, filling the chambers with liquid will prime the pump in most cases.
	Suction side air leakage or air in product.	Visually inspect all suction-side gaskets and pipe connections.
	Pumped fluid in air exhaust muffler.	Disassemble pump chambers. Inspect for diaphragm rupture or loose diaphragm plate assembly.
Pump Cycles Running Sluggish / Stalling, Flow Unsatisfactory	Over lubrication.	Set lubricator on lowest possible setting or remove. Units are designed for lube free operation.
	Icing.	Remove muffler screen, de-ice, and re-install. Install a point of use air drier.
	Clogged manifolds.	Clean manifolds to allow proper air flow.
	Deadhead (system pressure meets or exceeds air supply pressure).	Increase the inlet air pressure to the pump. Pump is designed for 1:1 pressure ratio at zero flow. (Does not apply to high pressure 2:1 units).
	Cavitation on suction side.	Check suction (move pump closer to product).
	Lack of air (line size, PSI, CFM).	Check the air line size, length, compressor capacity.
	Excessive suction lift.	For lifts exceeding 20' of liquid, filling the chambers with liquid will prime the pump in most cases.
	Air supply pressure or volume exceeds system hd.	Decrease inlet air (press. and vol.) to the pump. Pump is cavitating the fluid by fast cycling.
	Undersized suction line.	Meet or exceed pump connections.
	Restrictive or undersized air line.	Install a larger air line and connection.
	Suction side air leakage or air in product.	Visually inspect all suction-side gaskets and pipe connections.
	Suction line is blocked.	Remove or flush obstruction. Check and clear all suction screens or strainers.
	Pumped fluid in air exhaust muffler.	Disassemble pump chambers. Inspect for diaphragm rupture or loose diaphragm plate assembly.
	Check valve obstructed.	Disassemble the wet end of the pump and manually dislodge obstruction in the check valve pocket.
	Check valve and/or seat is worn or needs adjusting.	Inspect check valves and seats for wear and proper setting. Replace if necessary.
	Entrained air or vapor lock in chamber(s).	Purge chambers through tapped chamber vent plugs. Purging the chambers of air can be dangerous.
Product Leaking Through Exhaust	Diaphragm failure, or diaphragm plates loose.	Replace diaphragms, check for damage and ensure diaphragm plates are tight.
	Diaphragm stretched around center hole or bolt holes.	Check for excessive inlet pressure or air pressure. Consult Chemical Resistance Chart for compatibility with products, cleaners, temperature limitations and lubrication.
Premature Diaphragm Failure	Cavitation.	Enlarge pipe diameter on suction side of pump.
	Excessive flooded suction pressure.	Move pump closer to product. Raise pump/place pump on top of tank to reduce inlet pressure. Install Back pressure device (Tech bulletin 41r). Add accumulation tank or pulsation dampener.
	Misapplication (chemical/physical incompatibility).	Consult Chemical Resistance Chart for compatibility with products, cleaners, temperature limitations and lubrication.
	Incorrect diaphragm plates or plates on backwards, installed incorrectly or worn.	Check Operating Manual to check for correct part and installation. Ensure outer plates have not been worn to a sharp edge.
Unbalanced Cycling	Excessive suction lift.	For lifts exceeding 20' of liquid, filling the chambers with liquid will prime the pump in most cases.
	Undersized suction line.	Meet or exceed pump connections.
	Pumped fluid in air exhaust muffler.	Disassemble pump chambers. Inspect for diaphragm rupture or loose diaphragm plate assembly.
	Suction side air leakage or air in product.	Visually inspect all suction-side gaskets and pipe connections.
	Check valve obstructed.	Disassemble the wet end of the pump and manually dislodge obstruction in the check valve pocket.
	Check valve and/or seat is worn or needs adjusting.	Inspect check valves and seats for wear and proper setting. Replace if necessary.
	Entrained air or vapor lock in chamber(s).	Purge chambers through tapped chamber vent plugs.

For additional troubleshooting tips contact After Sales Support at service.warrenrupp@idexcorp.com or 419-524-8388

Material Codes - The Last 3 Digits of Part Number

000..... Assembly, sub-assembly; and some purchased items
010..... Cast Iron
012..... Powered Metal
015..... Ductile Iron
020..... Ferritic Malleable Iron
025..... Music Wire
080..... Carbon Steel, AISI B-1112
100..... Alloy 20
110..... Alloy Type 316 Stainless Steel
111..... Alloy Type 316 Stainless Steel (Electro Polished)
112..... Alloy C
113..... Alloy Type 316 Stainless Steel (Hand Polished)
114..... 303 Stainless Steel
115..... 302/304 Stainless Steel
117..... 440-C Stainless Steel (Martensitic)
120..... 416 Stainless Steel (Wrought Martensitic)
123..... 410 Stainless Steel (Wrought Martensitic)
148..... Hardcoat Anodized Aluminum
149..... 2024-T4 Aluminum
150..... 6061-T6 Aluminum
151..... 6063-T6 Aluminum
152..... 2024-T4 Aluminum (2023-T351)
154..... Almag 35 Aluminum
155..... 356-T6 Aluminum
156..... 356-T6 Aluminum
157..... Die Cast Aluminum Alloy #380
158..... Aluminum Alloy SR-319
159..... Anodized Aluminum
162..... Brass, Yellow, Screw Machine Stock
165..... Cast Bronze, 85-5-5-5
166..... Bronze, SAE 660
170..... Bronze, Bearing Type, Oil Impregnated
175..... Die Cast Zinc
180..... Copper Alloy
305..... Carbon Steel, Black Epoxy Coated
306..... Carbon Steel, Black PTFE Coated
307..... Aluminum, Black Epoxy Coated
308..... Stainless Steel, Black PTFE Coated
309..... Aluminum, Black PTFE Coated
310..... PVDF Coated
313..... Aluminum, White Epoxy Coated
330..... Zinc Plated Steel
331..... Chrome Plated Steel
332..... Aluminum, Electroless Nickel Plated
333..... Carbon Steel, Electroless Nickel Plated
335..... Galvanized Steel
336..... Zinc Plated Yellow Brass
337..... Silver Plated Steel
340..... Nickel Plated
342..... Filled Nylon
351..... Food Grade Santoprene; Color: NATURAL
353..... Geolast; Color: BLACK
354..... Injection Molded #203-40 Santoprene- Duro 40D +/-5; Color: RED
355..... Thermal Plastic
356..... Hytrel; Color: BLUE
357..... Injection Molded Polyurethane; Color: GREEN
358..... Urethane Rubber; Color: NATURAL (Some Applications) (Compression Mold)
359..... Urethane Rubber; Color: NATURAL
360..... Nitrile Rubber; Color Coded: RED
361..... Nitrile
363..... FKM (Fluorocarbon). Color Coded: YELLOW
364..... E.P.D.M. Rubber. Color Coded: BLUE
365..... Neoprene Rubber; Color Coded: GREEN
366..... Food Grade Nitrile; Color: WHITE
368..... Food Grade EPDM; Color: GRAY
370..... Butyl Rubber Color Coded: BROWN
371..... Philthane (Tuftane)
374..... Carboxylated Nitrile
375..... Fluorinated Nitrile
378..... High Density Polypropylene
379..... Conductive Nitrile; Color Coded: RED & SILVER
384..... Conductive Neoprene; Color Coded: GREEN & SILVER
405..... Cellulose Fibre
408..... Cork and Neoprene
425..... Compressed Fibre
426..... Blue Gard
440..... Vegetable Fibre
465..... Fibre
500..... Delrin 500
501..... Delrin 570
502..... Conductive Acetal, ESD-800; ..... Color: BLACK
503..... Conductive Acetal, Glass-Filled ..... Color: BLACK; Color Coded: YELLOW
505..... Acrylic Resin Plastic
506..... Delrin 150
520..... Injection Molded PVDF; Color: NATURAL
521..... Injection Molded Conductive PVDF; Color: BLACK; Color Coded: LIGHT GREEN
540..... Nylon
541..... Nylon
542..... Nylon
544..... Nylon Injection Molded
550..... Polyethylene
551..... Glass Filled Polypropylene; Color: BLACK
552..... Unfilled Polypropylene; Color: NATURAL
555..... Polyvinyl Chloride
556..... Black Vinyl
557..... Conductive Polypropylene; Color: BLACK; Color Coded: SILVER
558..... Conductive HDPE; Color: BLACK ..... Color Coded: SILVER
559..... Conductive Polypropylene; Color: BLACK ..... Color Coded: SILVER
570..... Rulon II
580..... Ryton
590..... Valox
591..... Nylatron G-S
592..... Nylatron NSB
600..... PTFE (virgin material) Tetrafluorocarbon (TFE)
601..... PTFE (Bronze and moly filled)
602..... Filled PTFE
603..... Blue Gylon
604..... PTFE
606..... PTFE
607..... Envelon
608..... Conductive PTFE; Color: BLACK
610..... PTFE Encapsulated Silicon
611..... PTFE Encapsulated FKM
632..... Neoprene/Hytrel
633..... FKM/PTFE
634..... EPDM/PTFE
635..... Neoprene/PTFE
637..... PTFE , FKM/PTFE
638..... PTFE , Hytrel/PTFE
639..... Nitrile/TFE
643..... Santoprene®/EPDM
644..... Santoprene®/PTFE
656..... Santoprene Diaphragm and Check Balls/EPDM Seats
661..... EPDM/Santoprene
666..... FDA Nitrile Diaphragm, PTFE Overlay, Balls, and Seals
668..... PTFE, FDA Santoprene/PTFE

Delrin is a registered tradename of E.I. DuPont.

Gylon is a registered tradename of Garlock, Inc.

Nylatron is a registered tradename of Polymer Corp.

Santoprene is a registered tradename of Exxon Mobil Corp.

Rulon II is a registered tradename of Dixion Industries Corp.

Ryton is a registered tradename of Phillips Chemical Co.

Valox is a registered tradename of General Electric Co.

PortaPump, Tranquilizer and SludgeMaster are registered tradenames of Warren Rupp, Inc.

RECYCLING

Many components of SANDPIPER® AODD pumps are made of recyclable materials. We encourage pump users to recycle worn out parts and pumps whenever possible, after any hazardous pumped fluids are thoroughly flushed.

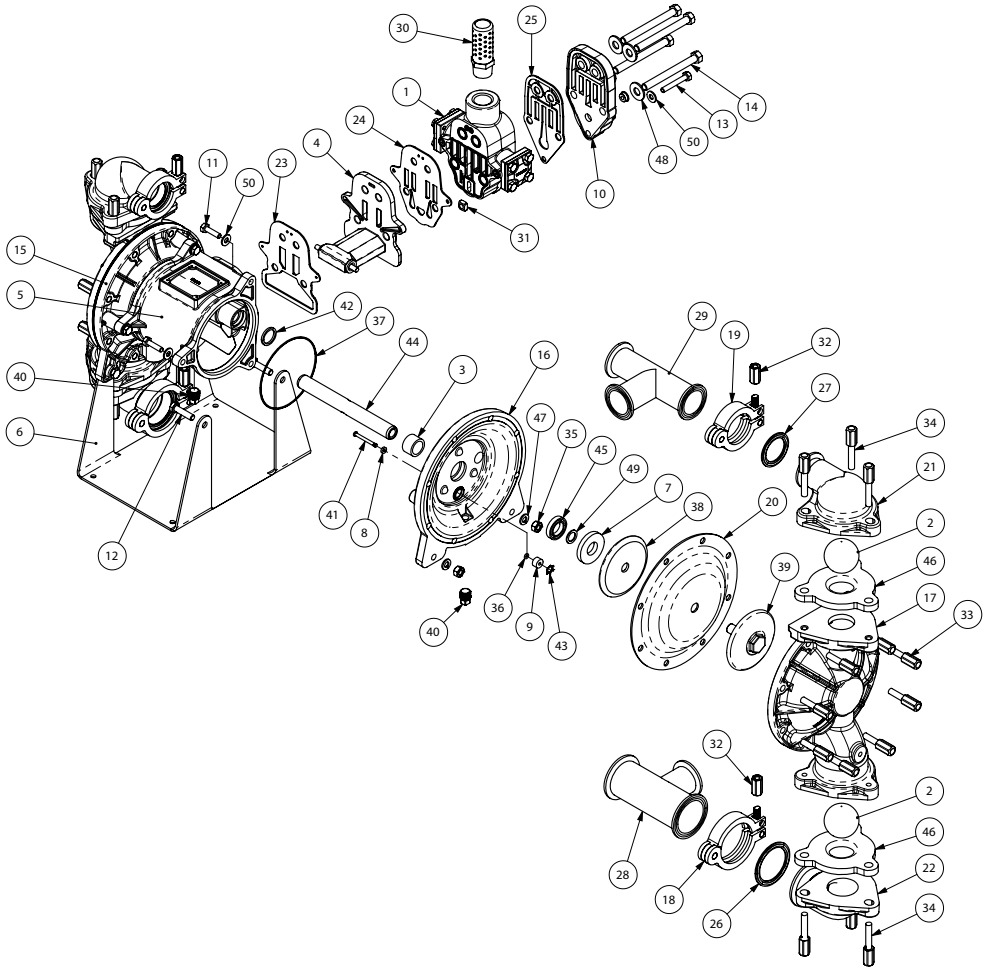

Service & Repair Kits

476.103.000 Air End Kit

Sleeve and Spool Set, Pilot Valve Assembly, Bumpers, U-cup Seals, Gaskets, O-rings, Seals, Plungers

476.057.366 Wet End Kit FDA White Nitrile for
SSB1,TF4SS
Diaphragms, Balls, and Seats

476.057.368 Wet End Kit FDA EPDM for
SSB1,TY4SS
Diaphragms, Balls, and Seats

476.077.366 Wet End Kit FDA White Nitrile for
DSB1,TF4SS
Diaphragms, Balls, and Seats

MODEL DSB1-3A TYPE TF-4-SS

3-A STANDARD AND USDA ACCEPTED FOR DAIRY APPLICATIONS

Certain wetted components are changed to comply with USDA Dairy Division requirements.

Use of model DSB1-A without an electronic leak detector assembly voids the USDA DAIRY ACCEPTANCE. Usage of this control device is mandatory for acceptance in USDA Accepted Dairy Operations.

Change the following:

ITEM 28 CHANGE TO P/N 196-072-113
ITEM 34 CHANGE TO P/N 612-110-113
ITEM 36 CHANGE TO P/N 286-039-366
ITEM 39 CHANGE TO P/N 518-048-113
ITEM 40 CHANGE TO P/N 518-049-113
ITEM 41 CHANGE TO P/N 312-065-113
ITEM 42 CHANGE TO P/N 312-056-113
ITEM 48 CHANGE TO P/N 542-008-000

ELECTRONIC LEAK DETECTOR ASSEMBLY is required to maintain USDA-DAIRY ACCEPTANCE.

Composite Repair Parts List

Item	Part Number	Description	Qty.
1	031.203.332	ASSEMBLY, MAIN AIR VALVE	1
2	050.019.366	BALL, CHECK	4
	050.019.368	BALL, CHECK	4
3	070.012.170	BEARING, SLEEVE	2
4	095.074.001	PILOT VALVE ASSEMBLY	1
5	114.011.332	INTERMEDIATE	1
6	115.078.115	BRACKET, FOOT	1
7	132.019.360	BUMPER	2
8	132.022.360	BUMPER, ACTUATOR	2
9	135.034.506	BUSHING, PLUNGER	2
10	165.134.332	CAP, AIR INLET, ASS'Y	1
11	170.032.115	CAPSCREW, HEX HD, 1/4-20 X 1.00	6
12	170.045.115	CAPSCREW, HEX HEAD 5/16-18 X 1 1/4	4
13	170.063.115	CAPSCREW, HEX HD, 1/4-20 X 1.75	1
14	170.083.115	CAPSCREW, HEX HD, 3/8-16 UNC X 3.25	4
15	196.066.332	CHAMBER, INNER	1
16	196.064.332	CHAMBER, INNER	1
17	196.065.111	CHAMBER, OUTER	2
	196.072.113	CHAMBER, OUTER (FOR DSB1 ONLY)	2
18	200.033.115	CLAMP, 2"	2
19	200.033.115	CLAMP, 1.5"	2
20	286.008.366	DIAPHRAGM	2
	286.008.368	DIAPHRAGM	2
21	312.051.110	ELBOW, DISCHARGE	2
	312.056.113	ELBOW, DISCHARGE (FOR DSB1 ONLY)	2
22	312.052.110	ELBOW, SUCTION	2
	312.065.113	ELBOW, SUCTION (FOR DSB1 ONLY)	2
23	360.056.379	GASKET	1
24	360.057.360	GASKET	1
25	360.058.360	GASKET	1
26	361.005.366	GASKET, SPACER	2
	361.005.368	GASKET, SPACER	2
27	361.006.366	GASKET, SPACER	2
	361.006.368	GASKET, SPACER	2
28	518.048.111	SUCTION MANIFOLD	1
	518.048.113	SUCTION MANIFOLD (FOR DSB1 ONLY)	1
29	518.049.111	DISCHARGE MANIFOLD	1
	518.049.113	DISCHARGE MANIFOLD (FOR DSB1 ONLY)	1
30	530.036.000	MUFFLER	1
31	542.001.330	NUT, SQUARE	1
32	542.002.114	NUT, STUD	4
33	542.003.000	NUT, STUD	16
	542.008.000	NUT, STUD (FOR DSB1 ONLY)	16
34	542.004.000	NUT, STUD	12
35	545.004.115	NUT, HEX, 5/16-18	4
36	560.001.360	O-RING	2
37	560.040.360	O-RING	2
38	612.022.330	PLATE, DIAPHRAGM, INNER	2
39	612.101.111	OUTER DIAPHRAGM PLATE ASSEMBLY	2
	612.110.113	OUTER DIAPHRAGM PLATE ASSEMBLY (FOR DSB1 ONLY)	2
40	618.003.330	PLUG, PIPE, 1/4	3
41	620.007.114	PLUNGER, ACTUATOR	2
42	675.040.360	RING, SEALING	2
43	675.042.115	RING, RETAINING	2
44	685.039.120	ROD, DIAPHRAGM	1
45	720.010.375	SEAL, U-CUP	2
46	722.045.366	SEAT, CHECK VALVE	4
	722.045.368	SEAT, CHECK VALVE	4
47	900.004.115	WASHER, LOCK - 5/16	4
48	901.005.115	WASHER, FLAT, 3/8	4
49	901.012.180	WASHER, SEALING	2
50	901.035.115	WASHER, FLAT, 1/4	7

LEGEND:

◯ = Items contained within Air End Kits

□ = Items contianed within Wet End Kits

Note: *Kits contain components specific to the material codes.*

Air Distribution Valve Assembly
With Aluminum Center

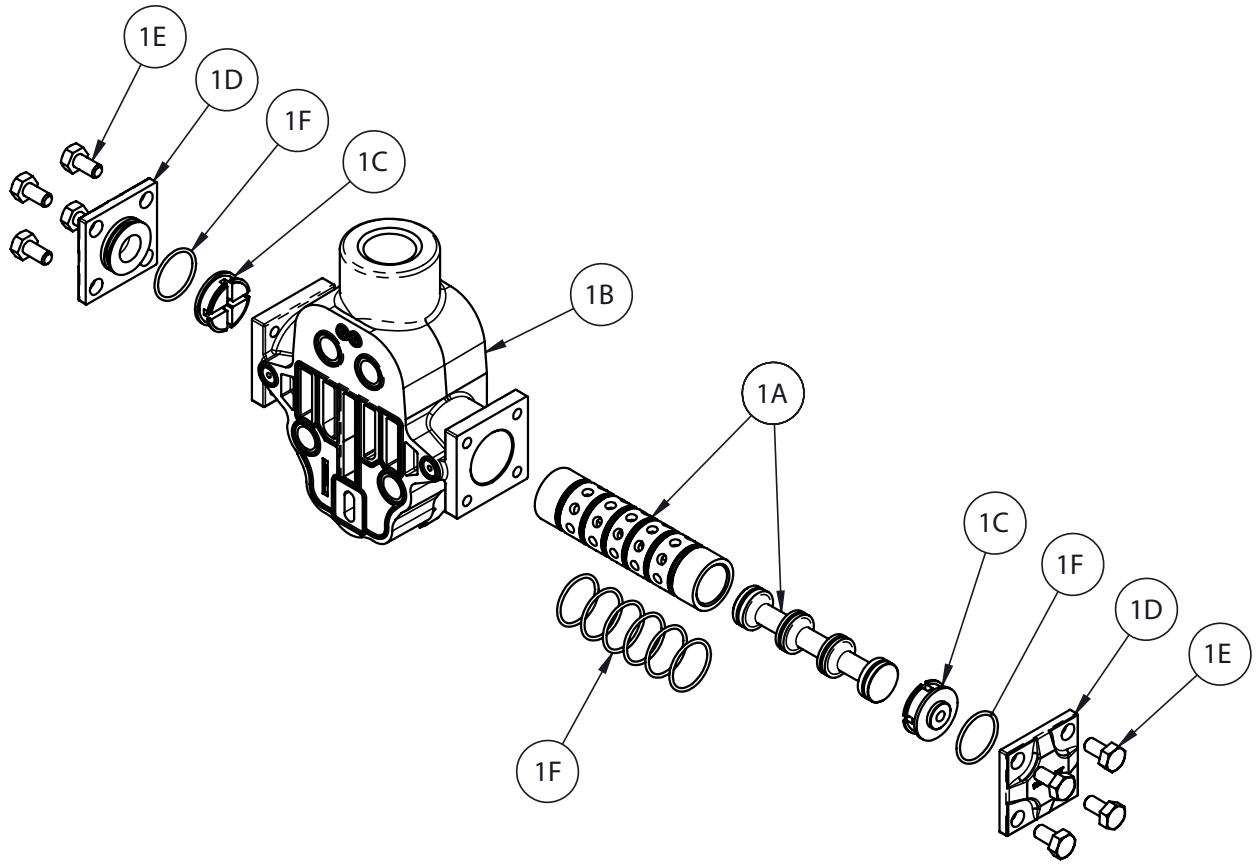

Air Distribution Valve Servicing

See repair parts drawing, remove screws.

Step 1: Remove hex capscrews (1E).

Step 2: Remove end cap (1D).

Step 3: Remove spool part of (1A) (caution: do not scratch).

Step 4: Press sleeve (1A) from body (1B).

Step 5: Inspect bumpers (1C) and o-rings (1F).

Step 6: Lightly lubricate O-Rings (1F) on sleeve (1A).

Step 7: Press sleeve (1A) into body (1B).

Step 8: Reassemble in reverse order, starting with step 3.

Note: Sleeve and spool (1A) set is match ground to a specified clearance sleeve and spools (1A) cannot be interchanged.

Main Air Valve Assembly Parts List

Item	Item Number	Description	Qty
1	031.203.332	Assembly, Main Air Valve	1
1A	031.039.000	Sleeve & Spool Set	1
1B	095.113.332	Body, Valve	1
1C	132.037.357	Bumper	2
1D	165.129.332	Cap, End	2
1E	170.032.330	1/4-20 X 3/4 Capscrew	8
1F	560.058.360	7/8 ID X 1/16 CS O-Ring	8

LEGEND:

◯ = Items contained within Air End Kits

⚠ IMPORTANT

Read these instructions completely, before installation and start-up. It is the responsibility of the purchaser to retain this manual for reference. Failure to comply with the recommendations stated in this manual will damage the pump, and void factory warranty.

Pilot Valve Assembly

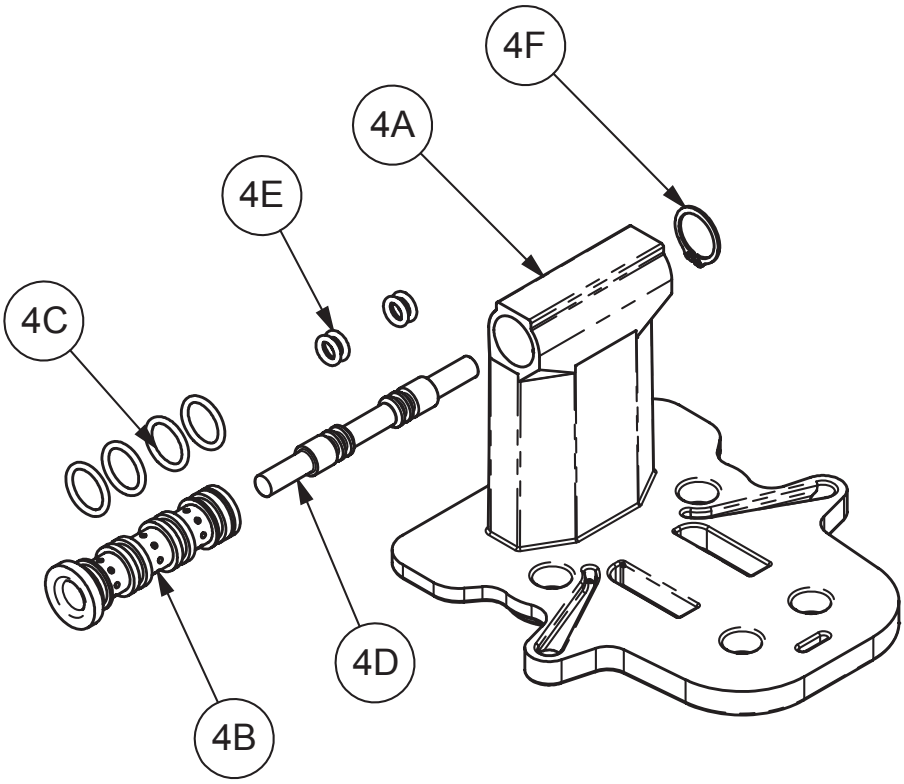

Pilot Valve Servicing

With Pilot Valve removed from pump.

Step 1: Remove snap ring (4F).

Step 2: Remove sleeve (4B), inspect O-Rings (4C), replace if required.

Step 3: Remove spool (4D) from sleeve (4B), inspect O-Rings (4E), replace if required.

Step 4: Lightly lubricate O-Rings (4C) and (4E).

Reassemble in reverse order.

PILOT VALVE ASSEMBLY PARTS LIST

Item	Part Number	Description	Qty
4	095.074.001	Pilot Valve Assembly	1
4A	095.071.557	Pilot Valve Body	1
4B	755.025.162	Pilot Valve sleeve	1
4C	560.033.360	O-Ring	4
4D	775.014.115	Pilot Valve Spool	1
4E	560.023.360	O-Ring	4
4F	675.037.050	Retaining Ring	1

LEGEND:

○ = Items contained within Air End Kits

Diaphragm Service Drawing

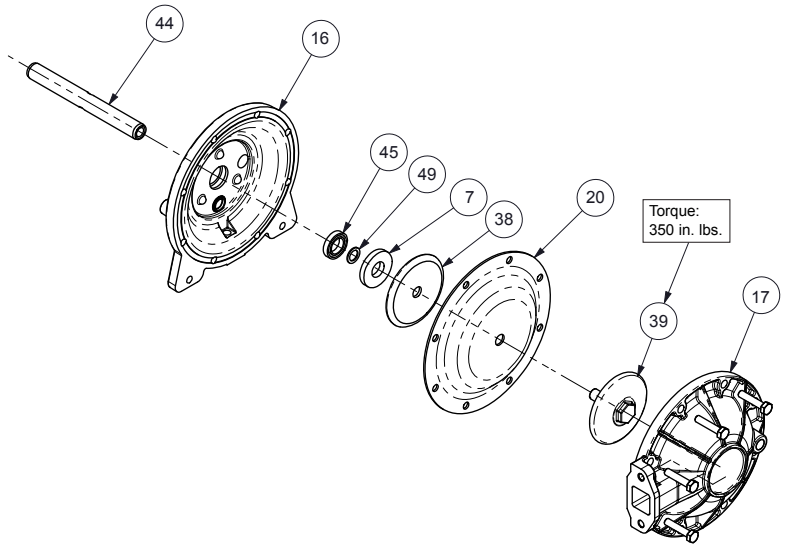

Diaphragm Servicing

Step 1: With manifolds and outer chambers removed, remove diaphragm assemblies from diaphragm rod. **DO NOT** use a pipe wrench or similar tool to remove assembly from rod. Flaws in the rod surface may damage bearings and seal. Soft jaws in a vise are recommended to prevent diaphragm rod damage.

Step 1.A: NOTE: Not all inner diaphragm plates are threaded. Some models utilize a through hole in the inner diaphragm plate. If required to separate diaphragm assembly, place assembly in a vise, gripping on the exterior cast diameter of the inner plate. Turn the outer plate clockwise to separate the assembly.

Always inspect diaphragms for wear cracks or chemical attack. Inspect inner and outer plates for deformities, rust scale and wear. Inspect intermediate bearings for elongation and wear. Inspect diaphragm rod for wear or marks.
Clean or repair if appropriate. Replace as required.

Step 2: Reassembly: There are two different types of diaphragm plate assemblies utilized throughout the Sandpiper product line: Outer plate with a threaded stud, diaphragm, and a threaded inner plate. Outer plate with a threaded stud, diaphragm, and an inner plate with through hole. Secure threaded inner plate in a vise. Ensure that the plates are being installed with the outer radius against the diaphragm.

Step 3: Lightly lubricate, with a compatible material, the inner faces of both outer and inner diaphragm plates when using on non Overlay diaphragms (For EPDM water is recommended). No lubrication is required.

Step 4: Push the threaded outer diaphragm plate through the center hole of the diaphragm. **Note:** Most diaphragms are installed with the natural bulge out towards the fluid side.

Step 5: Thread or place, outer plate stud into the inner plate. For threaded inner plates, use a torque wrench to tighten the assembly together. Torque values are called out on the exploded view.

Repeat procedure for second side assembly. Allow a minimum of 15 minutes to elapse after torquing, then re-torque the assembly to compensate for stress relaxation in the clamped assembly.

Step 6: Thread one assembly onto the diaphragm rod with sealing washer (when used) and bumper.

Step 7: Install diaphragm rod assembly into pump and secure by installing the outer chamber in place and tightening the capscrews.

Step 8: On opposite side of pump, thread the remaining assembly onto the diaphragm rod. Using a torque wrench, tighten the assembly to the diaphragm rod. Align diaphragm through bolt holes, always going forward past the recommended torque. Torque values are called out on the exploded view. **NEVER** reverse to align holes, if alignment cannot be achieved without damage to diaphragm, loosen complete assemblies, rotate diaphragm and reassemble as described above.

⚠ IMPORTANT

Read these instructions completely, before installation and start-up. It is the responsibility of the purchaser to retain this manual for reference. Failure to comply with the recommendations stated in this manual will damage the pump, and void factory warranty.

5 - YEAR Limited Product Warranty

Warren Rupp, Inc. ("Warren Rupp") warrants to the original end-use purchaser that no product sold by Warren Rupp that bears a Warren Rupp brand shall fail under normal use and service due to a defect in material or workmanship within five years from the date of shipment from Warren Rupp's factory. Warren Rupp brands include Warren Rupp®,SANDPIPER®, SANDPIPER Signature Series™, MARATHON®, Porta-Pump®, SludgeMaster™ and Tranquilizer®.

The use of non-OEM replacement parts will void (or negate) agency certifications, including CE, ATEX, CSA, 3A and EC1935 compliance (Food Contact Materials). Warren Rupp, Inc. cannot ensure nor warrant non-OEM parts to meet the stringent requirements of the certifying agencies.

~ See sandpiperpump.com/content/warranty-certifications for complete warranty, including terms and conditions, limitations and exclusions. ~

WARREN RUPP, INC.

Declaration of Conformity

Manufacturer: Warren Rupp, Inc., 800 N. Main Street
Mansfield, Ohio, 44902 USA

Certifies that Air-Operated Double Diaphragm Pump Series: HDB, HDF, M Non-Metallic, S Non-Metallic, M Metallic, S Metallic, T Series, G Series, U Series, EH and SH High Pressure, RS Series, W Series, SMA and SPA Submersibles, and Tranquilizer® Surge Suppressors comply with the European Community Directive 2006/42/EC on Machinery, according to Annex VIII. This product has used Harmonized Standard EN809:1998+A1:2009, Pumps and Pump Units for Liquids - Common Safety Requirements, to verify conformance.

David Roseberry
Signature of authorized person

October 20, 2005
Date of issue

David Roseberry
Authorised Representative:
IDEX Pump Technologies
R79 Shannon Industrial Estate,
Shannon, Co. Clare
Ireland

Engineering Manager
Title

February 27, 2017
Date of revision

IDEX

Revision Level: F

CE

WARREN RUPP, INC.

EC / EU Declaration of Conformity

The objective of the declaration described is in conformity with the relevant Union harmonisation legislation: Directive 94/9/EC (until April 19, 2016) and Directive 2014/34/EU (from April 20, 2016).

Manufacturer:
Warren Rupp, Inc.
A Unit of IDEX Corportion
800 North Main Street
P.O. Box 1568
Mansfield, OH 44902 USA

Applicable Standard:
EN13463-1: 2001
EN13463-5: 2003
EN60079-25: 2004
Harmonised Standard:
EN13463-1: 2009
EN13463-5: 2011
EN60079-25:2010

The harmonised standards have been compared to the applicable standards used for certification purposes and no changes in the state of the art technical knowledge apply to the listed equipment.

AODD Pumps and Surge Suppressors
Technical File No.: 203104000-1410/MER

AODD (Air-Operated Double Diaphragm) Pumps
EC Type Examination Certificate No. Pumps: KEMA 09ATEX0071 X

DEKRA Certification B.V. (0344)
Meander 1051
6825 MJ Arnhem
The Netherlands

Hazardous Locations Applied:

I M1 c	II 1 G c T5
II 2 G Ex ia c IIC T5	II 1 D c T100°C
II 2 D Ex c iaD 20 IP67 T100°C	II 2 G c T5
II 2 G Eex m c II T5	II 2 D c T100°C
II 2 D c IP65 T100°C	II 2 G c IIB T5

SANDPIPER®
A WARREN RUPP, INC. BRAND

Tranquilizer®

DATE/APPROVAL/TITLE:
18 March 2016

David Roseberry
David Roseberry, Director of Engineering

IDEX